NATURAL 4 Bar 650mm STR-TDC 230V

POLISHED GRADE 304 Stainless Steel

Controller Features - TDC Timer:
● 4 On/Off programs in a 24hr period ● Temperature Adjustment ● 4 Modes of operation
● Screen Auto-Lock ● One button push - QUICK RUN ● 24hr Clock.

Controller Technical Specifications:

Controller: TDC Timer
INPUT Voltage Range: 190VAC~250VAC
Operating Frequency: 50 Hz ±2%
Load Capability: 0.18A~4A
Load Control Range: 40~100%
Standby Current: 3.5mA

HTR Technical Specifications:

Model: NAT04231-TDC-POLS
Size: 674mm (width) x 535mm (height)
Power: 60 Watts
Current: 0.26 Amps
Volts: 230 VAC
IP Rating: IPX5

Suggested Height of Electrical Outlet = 1125mm
(this is only an indication as every installation is different)

NOTES:
****EO** Denotes DUAL ENTRY Electrical Outlet connection*
****TDC** Denotes location of TDC Timer*

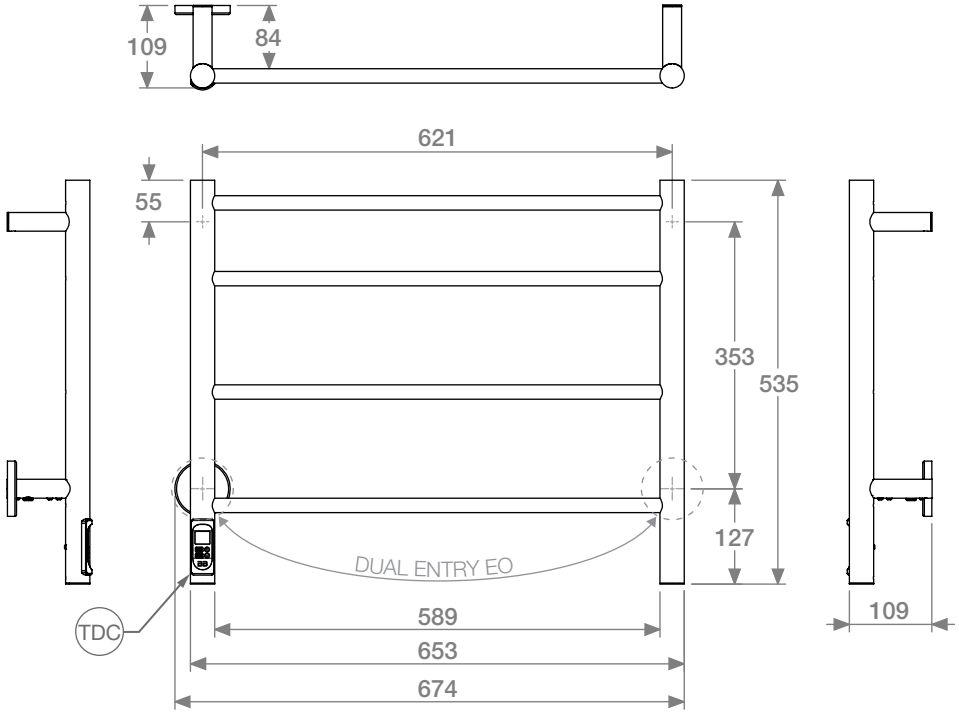

Dimensions given are in mm. Bathroom Butler® reserves the right to alter and/or remove designs from time to time without prior notice. This drawing is to be used for reference purposes only. E &O.E. This product may not be available in your specific country, please check local website for availability.
Copyright Bathroom Butler® 2016

BATHROOM BUTLER™

DRY ELEMENT TECHNOLOGY | RAPID HEATING 10-15min | TDC TIMER | DUAL ENTRY | GRADE 304 STAINLESS STEEL | 10 YEAR LIMITED GUARANTEE

South Africa: 0860 104 653 • info@bathroombutler.co.za • www.bathroombutler.co.za
Australia: 1300 133 320 • sales@bathe.net.au • www.bathe.net.au
Mauritius: 230 242 1248 • sales@lisinggroup.com • www.bathroombutler.com

Document version **3.3**
Product version **3.0**